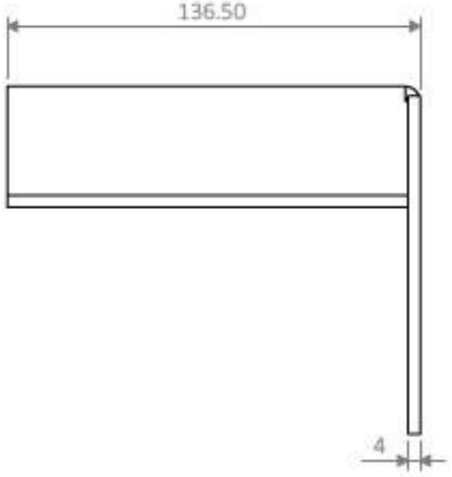
136.50
4

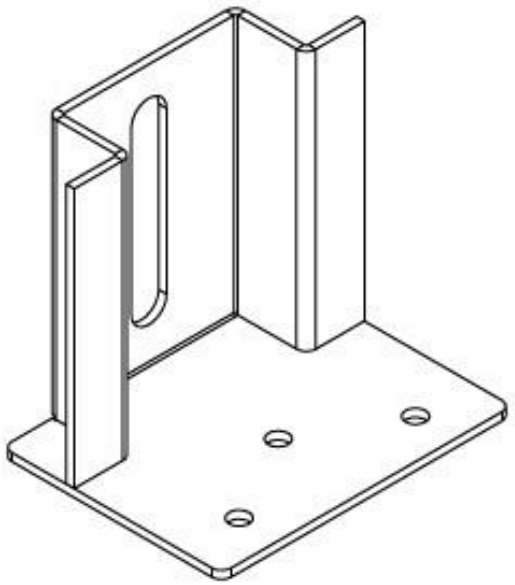

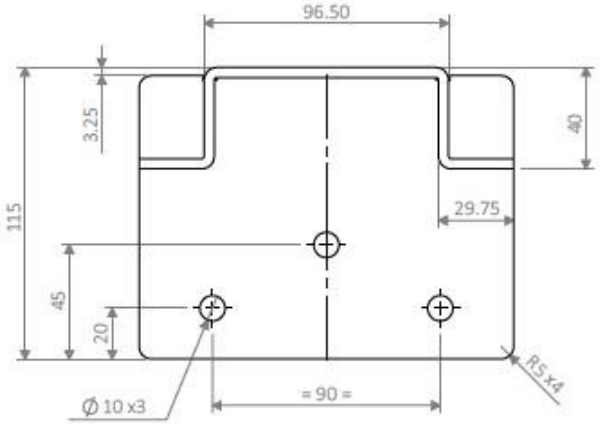
96.50
3.25
40
115
29.75
45
20
R5 x4
Ø 10 x3
= 90 =

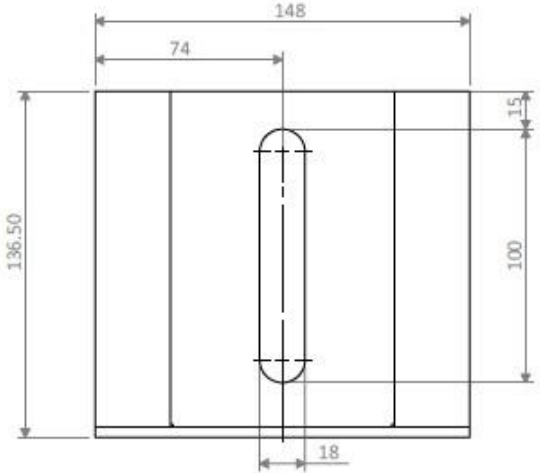
148
74
15
136.50
100
18